Chapter 4

SOCIAL STRUCTURE

Social structure consists of various units like family, marriage, lineage, clan, phratry, kinship system, social stratification and adjustment of immigrants. The structural units represent the networks of social relations in the form of groups, institutions, customs and traditions. These structured relationships determine as well as control human behaviour in a society or community.

This chapter analyses the structural aspects of the Barman in Silchar town. The important components of the social structure of the Barman community in Silchar town are being discussed below.

Family

The family as a social institution is found all societies, in all levels of culture, it is a basic/fundamental social institution. The elementary family unit is the strongest

structural and functional unit of the Barman social structure as well. As the traditional rule restricts the living of the Dimasa women of different matriclans in the same household, a newly married couple is supposed to construct its own house within a year of marriage. This tradition makes the nuclear family system in their community. But after adoption of Hinduism this tribal rule of residence has also undergone the transformation wherein the highly Hinduized Barman families of Cachar district did not observe this rule strictly. As a result, the joint and extended families have emerged among the Barmans in the villages (Paul 2001 : 57).

But under the influence of modern forces, the joint family system could not retain its preponderance among the Barmans of Silchar town wherein most of their families are found of nuclear type. The following table shows the patterns of the Barman families in Silchar town distributed into nuclear and joint family types for analytical purpose. Nuclear family is divided into two categories: (i) conjugal family, comprising only husband and wife, (ii) the family comprising husband, wife and their unmarried children. On the other hand joint family is divided into nine categories; (i) the family comprising husband, wife, unmarried children and husband's brother's son, (ii) husband, wife, unmarried children and wife's sister's son, (iii) husband, wife, unmarried children and husband's unmarried brother / sister, (iv) husband, wife, unmarried children and wife's brother, (v) husband, wife, unmarried children and husband's father / mother, (vi) husband, wife, unmarried children and husband's both parents, (vii) husband, wife, married son and grandson, (viii) husband, wife, unmarried children, wife's widow sister and her sons, (ix) paternal aunt, her nephew and niece.

Table 4.1 : Distribution of the Barman in Silchar Town into Types of Family

Family Types	Sub-types of Family	Number of Families (%)
Nuclear	Conjugal Family (husband and wife)	6
	Husband, wife and unmarried children	75
Total (%)		81 (72.97)
Joint	Husband, wife, unmarried children and husband's brother's son	3
	Husband, wife, unmarried children and wife's sister's son	1
	Husband, wife, unmarried children and husband's unmarried brother/sister	4
	Husband, wife, unmarried children and wife's brother.	2
	Husband, wife, unmarried children and husband's father/or mother	8
	Husband, wife, unmarried children and husband's both parents	2
	Husband, wife, married son and grand son	7
	Husband, wife, unmarried children, wife's widow sister and her son	1
	Paternal aunt, her nephew and nice	2
Total (%)		30 (27.03)
Grand Total (%)		**111 (100)**

Source : Field Survey, March 01 - November 30, 2006

The table reveals that most of the families (72.97%) are nuclear families. It is not due to the continuation of their traditional Dimasa custom which restricts the living of two matriclans under a common roof because they have adopted joint family in the rural areas. The major reason is the urbanization. As most of the Barmans have migrated individually for education or jobs of the Government service, they have to leave their kins in the villages. After marriage they remain in their nuclear families in the town. The rest two seventh families are joint families owing to various factors in the urban setting itself or their kinship structure. In some cases, the parents and their married son(s) and

grand children are living in the same families. In other cases, the kins-primary, secondary or tertiary have been joining the families for jobs and education in the town. On the other hand, some families which were joint families in the past have now broken into nuclear families due to quarrels or maladjustment of the members.

Thus, the nuclearization of family is a major change taking place among the Barmans of the town.

Family Size

The size of a family is determined by the culture of a society. Generally, in primitive and rural societies the family forms a unit of production and all the members have to work for subsistence. So, the people like to expand their family size in order to increase their manpower for production. But in urban communities the people like to have a family of limited number of children and the modern contraceptives help them in family planning.

In the rural setting, the Barmans of Cachar like to expand their family. Most of the Barman have medium sized family consisting 6 to 10 members. The large family (11 and more) is also common pattern (Paul 2001: 87).

But in the urban setting, most of the Barmans have small families. On the basis of size, their families are found classified into three categories; viz.,

(i) The small family comprising 1 to 4 members.

(ii) The medium family, comprising 5 to 8 members.

(iii) The large family, comprising more than 8 members.

The distribution of the Barman families into the three categories is presented in the following table.

Table 4.2 : Distribution of the Barman Families of Silchar Town by their Size

Size of Family (in number of members)	Number of Families(%)
Small (1 - 4)	84 (75.68)
Medium (5 - 8)	25 (22.52)
Large (above 8)	2 (1.80)
Total (%)	**111(100)**

Source : Field Survey, March 01 - November 30, 2006

The table exhibits that three fourths of the families are of the small size and slightly less than one fourth of the families belong to the medium size. The proportion of the large families is insignificant. Besides, the comparison of the family size with the family types indicates that a fraction of the small families is present in the joint types also.

Thus, the changing pattern of the family size reveals the impact of urbanization among the Barman people in Silchar town.

Family System

The Barman society being a patriarchal society, a father has authority in a family. It is the responsibility of father provide to food for his family. He is helped by all the able members of the family in his task. The mother's chief duty is to raise children and look after home. Nevertheless, the Barman woman enjoys a status as good as her male counterpart in the community. Men and women both work for maintaining their family. Children respect their parents very much. Even for grown ups, it is considered disrespectful to mention their parent's names (Apadar 1996 : 39).

The traditional family system remains more or less in unchanged form in the urban Barman community. No doubt father is the head of the family, yet he generally consult his wife before taking any final decision in any matter. Though at present many women (23.50%) are engaged in Government and private sectors, yet they render their overall services to the family and try utmost to maintain peace in the family.

Thus, rural and urban both the Barman communities show similar features of family system.

Inheritance of Familial Property

As per their traditional law of inheritance, the daughters inherit the maternal property which consists of cloths, ornaments, looms and utensils only whereas the sons inherit the paternal property such as house, weapons, cattle, agricultural land and cash. No male child could inherit maternal property and, likewise no female child could inherit her paternal property. In the absence of a male heir, the paternal property is inherited by the nearest male relative and in the absence of female heir the maternal property by the nearest female relative (Nunisa 2006 : 11; Sen 2003 : 54).

But, now-a-days, many Barman families of Silchar town like to distribute their family property equally among sons and daughter. No doubt, a daughter can't claim her paternal property. Only when her father wishes to give his property to her, she can get it. Many families prefer to give the maternal property to their daughters-in-law instead of other female relatives of the same clan in absence of a daughter. In absence of a son, all the movable and immovable properties are inherited to the daughter(s) automatically after the death of the parents.

In sum, the nuclear and small family is the dominant structural feature of the urban social organization of the Barman. The urbanization has also altered the rule of property inheritance in favour of the patriclans. But despite these changes, the women still enjoy an equal status with the males owing to their economic employment and independence.

Briefly, as a result of the combined effect of urbanization and occupations the Barman family is in the process of change on the pattern of middle class family in any urban setting.

Marriage

Marriage is a universal institution in human society without which the society could never be sustained. Family comes into existence and continues through the institution of marriage, universally found in all societies. A union between a man and woman through marriage provisions for the children born by the woman to be recognized as the legitimate offspring of both the partners and it defines all the institutional demands, rights, duties and immunities of both the parents and the children (Banerjee 1997 : 97).

The Barmans have their own tradition of marriage in their society. Traditionally in the Barman villages a girl at the age of 16-17 years is considered to be a marriageable girl. The marriage proposal is never initiated from the side of a girl. It is initiated from the side of a marriageable boy. As the Barmans follow double descent system, they consider patriclan exogamy, matriclan exogamy and level of relationship when a marriage is negotiated (Guha 2006 : 68). The Barmans strictly observe the rule of patriclan exogamy in marriages. A husband's clan is considered in relation to his wife's father's

clan. For example, a *Langthasa* boy cannot marry a girl whose father is *Langthasa*. As per the rule husband and wife must be from different patriclans. Like patriclan exogamy, the Barmans also maintain matriclan exogamy. No marriage can take place between the boys and the girls of the same matriclan. For example, a girl of *Madaima* clan cannot marry a boy whose mother's clan is *Madima*. Thus, the prevailing custom of their society forbids endogamy of patri and matri clans and violation of the clan exogamy, leads to excommunication from the society. Besides, the level of relationship *(Haingbai)* is to be reckoned with at the time of a marriage. Due to the clan system, all the Barmans become related to one another. While tracing the level of relationship (*Haing miliya*) for marriage if the lineage of the boy falls in the category of uncle to the girl or the category of grand son to the girl's father, the relationship is treated as 'mismatch' (*Haing bai miliya*). Hence, a marriage between cousins is allowed as long as both belong to different patri and matri clans (Nunisa 2006 : 9).

Such proscriptive rules of marriage are mandatorily observed in both the rural and the urban Barmans and in case of any violation of the rules the marriages are not accepted them gladly. A violation of the rule of tribe endogamy is tolerable but a violation of clan exogamy and *Haingbai* endogamy are not tolerated at all and the culprits are ex-communicated from the communities. In this respect both the Barman communities, rural and urban show similarity. The instances of such marriages are still negligible in the district (Paul 2001 : 111-12). But the age-at-marriage is extended in the urban Barman community which is discussed later on in this chapter.

Traditionally, the Barman community prefers negotiated marriage in the villages But, now-a days, many marriages are taking place through love, mutual consent and

elopement of boys and girls in the town and parents accept them if all the proscriptive rules are maintained.

After the division of the Dimasa-Kachari tribe into the Dimasa and the Barman, the marriage ties between the two groups ceased for about 100 years. In 1950, for the first time, marriage was solemnized between the King Joyvadra Hagjer of N.C.Hills and Nirupama Barman of Cachar plains through mutual consent and elopement. They have two daughters and one of them again married with a Barman boy. Thereafter, many marriages have taken place between the Barmans and the Dimasas, particularly their educated youths both in the rural as well as urban settings. As the level of education among the Barman girls is higher than the Dimasa girls, the educated Dimasa boys prefer to marry a Barman girl (Paul 2001 : 111-12).

Marital Status

The following table reveals the marital status of the Barmans in Silchar town.

Table 4.3 : Distribution of the Barmans by their Marital Statuses in Silchar Town

Marital Status	Number of Males (%)	Number of Females (%)	Total (%)
Married	119 (47.22)	119 (54.83	238 (50.75)
Unmarried	130 (51.59)	87 (40.09)	217 (46.27)
Widow / Widower	3 (1.19)	11 (5.07)	14 (2.98)
Total	**252 (100)**	**217 (100)**	**469 (100)**

Source : Field Survey March 01 - November 30, 2006

The table demonstrates that of the total population over a half of the people are married and slightly less than half (46.27%) are unmarried. A small fraction (2.98%) of widows/widowers is also found and no case of divorce is found. This indicates the stability of their marriage and family even in the urban setting.

Age-at- marriage

Age-at-marriage is also a parameter to understand the influence of modernization in any society. The following two tables are presented on the age at marriage of all married and widow / widower Barman males and females in the town.

Table 4.4 : Distribution of the Married Barman People into the Age-at-Marriage in the Town.

Group of Age Marriage	Number of Males (%)	Number of Females (%)	Total Population (%)
21-23	0	23 (19.33)	23 (9.66)
24 - 26	1 (0.84)	61 (51.26)	62 (26.05)
27-29	21 (17.65)	31(26.05)	52 (21.85)
30 - 32	56(47.06)	4 (3.36)	60 (25.21)
33 - 35	38 (31.93)	0	38(15.97)
36 - 38	3 (2.52)	0	3 (1.26)
Total(%)	**119 (100)**	**119(100)**	**238 (100)**

Source : Field Survey, March 01 - November 30, 2006

The table shows that of the total married people (238) over one fourth people got married at the age of 24-26 years. Another one fourth people got married at the age of 30-32 years. Nearly one fifth got married at the age of 33-35 years. Slightly less than one tenth got married at the age of 21-23 years. A negligible portion of people (1.26%) got married at the age of 36-38 years.

If one compares the data in gender perspective then the table reveal that around half the males and the females got married at the age of 24-26 and 30-32 years respectively. The males' age range for marriage is from 24-38 years whereas it is from 21-32 years from the females.

Thus, it is quite clear that, though the maximum females got married at the age of 24-26years, yet upper limit of the age at marriage is 32 years and lower limit of the

age at marriage is 21 years. On the other hand, though the maximum males got married at the age of 30-32, yet the upper age at marriage is 38 years and lower age at marriage is 27 years. Thus the age range for marriage of females is much lower than that for the males.

Table 4.5 : Distribution of the Widow / Widower Barman People into the Age-at-Marriage in Silchar Town

Group of Age-at-Marriage	Number of Males (%)	Number of Females (%)	Total Population (%)
15-17	0	6 (54.56)	6 (42.86)
18 - 20	0	3 (27.24)	3 (21.43)
21 - 23	0	2(18.18)	2 (14.29)
24 - 26	1 (33.33)	0	1 (7.14)
27 - 29	2 (66.67)	0	2 (14.29)
Total (%)	**3 (100)**	**11 (100)**	**14 (100)**

Source : Field Survey March 01 - November 30, 2006

The table reveals that, over half of the total widows got married at the age of 15-17 years, over one fourth got married at the age of 18-20 years and slightly less than one fifth widows got married at the age 21-23 years.

Of the widowers two thirds got married at age of 27-29 years and the rest got married at the age of 24-26 years.

Thus, the aged people got married in the early age than the new generation, before they migrated from the villages. The age-at-marriage for both males and females has gone up in the urban Barman community in comparison of the rural Barman community. Hence, the influence of modernity is clearly evident in the age-at-marriage of the urban Barman population.

Modes of Marriage

To understand impact of urbanization on their marriage, it is imperative to know about the modes of marriage among the Barman people in the town. Therefore, the following table is given to reveal the modes of marriage.

Table 4.6 : Distribution of the Barmans into Modes of Marriage in Silchar Town

Mode of Marriage	Number of married couples (%)
Marriage by negotiation	92 (77.97)
Love-cum-arranged marriage	21 (17.80)
Love marriage without the consent of parents	6 (5.04)
Total (%)	**119 (100)**

Source : Field Survey March 01 - November 30, 2006

The table reveals that near about four fifths of the marriages (77.97%) have been through negotiation, i.e., the parents of prospective bride and groom took initiative as per their customs. Near about one fourth of the marriages took place in conventional manner but males and females selected their mates themselves as per the rules of endogamy and exogamy and the society accepted them. The rest of marriages (5.04%) have taken place through mutual consent and elopement of males and females but without their guardians discontent and reluctance. In two cases, the Barman females have married the Bengali males whereas in other two cases the Barman males have each married a Bengali and an Assamese female. In three of these cases the parents of the respective brides and grooms have accepted them after a little resentment but in

one case of the Barman females the parents refused to accept her forever. Because they apprehended that accepting her back in family would lower their status in the Barman community and resultantly there would be problem in getting a bride for their son. Besides these four cases, there are two more cases of love marriage where in the males and females have selected each other as mates by observing the customs of tribe endogamy and clan exogamy. Their parents refused to accept them in the family initially. After a few months they were accepted and their relations in their families are as usual, now-a-days.

No doubt, there is a bit relaxation in the matter of inter-community marriages, now-a-days. Yet the parties involved in such marriages have to undergone some sort of punitive measures called *Dandi* approved by the executive body (Silchar Dimasa Samaj) of the organization. According to the dandi rule, the spouses have to give some money as compensation decided by the executive body in the given situation. The couple has to perform some rites also Though the Barman community, now-a-days, does accept the cases of love marriage and inter-community marriage, yet it does not encourage such cases. Therefore, the dandi rule restricts the young generation from its excessive practice of inter-community marriage and protects their offspring from the problems arising out of such marriages. The community still prefer a negotiated marriage.

Marriage Ceremony

Rural Situation

According to the tradition of the Barman society marriage proposal is always initiated from the male side. The boy's family visits the girl's house with a formal

proposal of marriage by offering salt wrapped in plantain leaf. The custom is known as *Shandidangshinba*. Though during negotiation of marriage the father of the girl will take the final decision, yet the consent of the girl and her mother has to be sought for. If they give their consent then only the father of the girl accepts the salt wrapped in plantain leaf. Henceforth, the boy and the girl are formally engaged for marriage. After the acceptance of marriage proposal by the girl's parents, the next step is to carry their traditional rice beer in a gourd called *Laothai* to the girl's house by the boy's parents and relatives. The custom is known as *Laothai-Langba* (carrying of rice beer). On this day the date and time of marriage is fixed among them (Nunisa 2006 :10).

The actual marriage ceremony takes place in the bride's house. In the evening of the day, as soon as the groom becomes ready to leave for bride's house, a ritual called *Mayofargurba* is performed in the traditional way by the Barman priest, *Hojai*, and the by groom, with his companions, starts for the bride's place, carrying *Ju/Judima* (the traditional rice beer) and meat (of the sacrified duck in *Mayoforgurba*). After reaching there, they are welcomed by the bride's relatives and they hand over them the *Ju* and the meat. In the courtyard of her house, all elderly persons take seats according to their seniority and then perform marriage ceremony in front of them. The Barmans still maintain their tradition of giving bride price (*Kulti*) of Rs.101/- at the time of marriage, contrary to the dowry system practised among the caste people. As among the Hindu Bengalis the bride takes seven rounds of the groom seated on a decorated chair in the *Kunji* (a decorated round place temporarily made of bamboo, glossy papers, flowers, leaves etc.) and by then they exchange garlands. This custom is called

Gidingba (equivalent to Bengali *sapto prodokkhin* i.e., seven rounds of walking is taken by the bride round the groom). Then another custom *Yauphoba* (equivalent to Bengali custom *dan*) is performed wherein the father/elder brother of the bride formally hands over his daughter/sister to the groom. This ritual is performed by a Bengali Brahmin priest in the Hindu manner. At the same time, the traditional ritual *Mayoforgurba* is performed by their traditional Barman priest, *Hojai*, only in the backyard of the bride's house. After that, a community feast is organized by the bride's family in the night and the rice beer (ju) is offered to all the guests. Meanwhile, the womenfolk sitting in a corner of the courtyard sing folksongs (Paul 2001 :208). Next day, the bride leaves her parents for her husband's house. The bride's father again hands over his daughter to the groom's parents and requests them to treat her as their own daughter. The parents of the groom assure them of daughterly treatment to her. Then, four of the aged persons receive the bride and seek blessing from all. This custom is called Disengba. At the groom's house the parents and relatives of the groom formally welcome the married couple. After two days, a reception party is arranged by the groom's family and her close kins. This custom is also called *Disengba.* After three days, the couple visits the bride's parents and stay there for three to five days. This custom is called *longkhauba* in their language (Paul 2001 : 209).

At the time of marriage the presence of the headman (*Khunang*) and other executive members of the respective village is required. Without their presence the marriage will never get social recognition in the Barman Community. Therefore, in a marriage the people give formal invitation to the headman by offering a betel leaf and a betel nut.

Marriage Ceromony: Performing of the custom *Gidingba* (seven rounds of walking taken by the bride round the groom)

Marriage Ceromony: Performing of the custom *Youphoba* (father/ elder brother formally hands over his daughter/ sister to the groom)

Urban Situation

In the urban context the Barmans are not willing at all to arrange their daughter's marriage before the age of 25 years. They are giving more emphasis on her education than marriage. The groom and his family also give more importance to her educational qualification and her family status in the community rather than her beauty and weaving skills as considered most important for marriage in the villages.

As is the tradition, the marriage proposal is initiated from groom's family in the urban community also.

The traditional marriage ceremony is too elaborate. It is not possible to observe the details in the urban Barman community as only a few of the aged persons know the details of the traditional customs. The middle aged people are somewhat aware of the customs, but the young generation is quite unaware of the customs. Besides, in the Barman villages, all the villagers are concentrated and at the time of marriage the neighbours help utmost. But in the town the Barman people are scattered and rather self centred to help the neighbours.

Now-a-days, the way of arranging the marriages is also changing and that, too affects the ceremonial aspect in the town. The following tables is presented on the basis of the ways of the marriage ceremonies of the Barmans in Silchar town.

Table 4 . 7 : Distribution of the Marriage Arrangement of the Barmans in Silchar Town.

Type of Marriage Arrangement	Number of Marriages(%)
Marriage in hired marriage halls	32 (26.89)
Marriage in Temple	17 (14.29)
Marriage at Home	64 (53.78)
Marriage without consent of guardians	6 (5.04)
Total(%)	**119 (100)**

Source : Field Survey, March 01 - November 30, 2006

The table shows that except 5% marriages which have taken place without consent of guardians, in all the marriages the two customs *Shaniagshinba* (giving salt wrapped in a plantain leaf at the time of marriage negotiation) and *Laothailangba* (carrying of traditional rice bear) are observed at the time of settlement of marriage. Of the total marriages, half the marriages were arranged at homes by following the traditional customs as elaborate as possible. In one fourth cases the very marriage ceremonies were arranged in hired marriage halls because of space shortage and to avoid extra burden. In such cases a few of the detailed customs are no doubt ignored but the enter marriage ceremony remained more or less in original form. In the rest cases marriages were solemnized in the Kachakanti Temple in Udharbond followed by a dinner party in hotel jointly organized by the families of the bride and the groom.

In all the above mentioned cases the tradition of *Mayofarguarba* (ritual for welfare) was compulsorily observed at the time of marriage. The tradition of bride price is also maintained by them. But the tradition of singing folksong by the womenfolk has become obsolete. Although the tradition of dowry system is not present among them, yet, now-a-days, the parents of the bride present some gifts like furniture, electronic goods, valuable utensils etc. to the groom at the time of marriage, which the groom's family never ask for. In all the marriage ceremonies except for the inter community marriages, the headman (*Khunang*) of the Barman community of in Silchar town was present. He was not present in the inter-community marriages as these are proscribed in the community and did not get social approval usually.

Re-marriage

The re-marriage of widow/widower is permissible in the Barman custom. But polygamy is prohibited except in the case of infertility of the first wife. Earlier, as among their Diamsa counter part, the customs of junior levirate (remarriage with husband's young brother) and junior sororate (remarriage with wife's younger sister) were prevalent. But after their adoption of Hinduism these customs have discontinued in the Barman community (Nunisa 2006 : 11; Paul 2001 : 113).

In the town only one case of remarriage has been found. The case is presented bellow.

Name	:	Nami Bala Barman
Age	:	75 years
Sex	:	Female
Marital Status	:	Widow
Qualification	:	Class VI
Birth place	:	Dholai
Present address	:	Idga Road, Malumgram, Silchar

Mrs. Nami Bala Barman is the second wife of late Janmojoy Barman settled in Silchar town in 1954 with her husband and a step son. After death of his first wife late Janmojoy Barman married her (1946) when she was 15 years old, and her step son (Mr.Chandra Shekher Barman) was only 2 years old. Although it was the second marriage of late Janmojoy Barman, yet it was solemnized conventionally and enthusiastically. At present, she has three sons of her own. After the death of her husband all the four sons separated. In spite of her own sons, Mrs. Nami Barman is

living with her step son as she loves him much more than her own sons and he treats her like his own mother

Divorce

In the Barman custom, divorce is permissible on the special ground of adultery, physical incapability, impotency and insanity. By their tradition, whenever a situation arises, a couple will go to the *Khunang* (the headman) of the region to settle the matter. The *Khunang* calls for all the males of the husband's *sengphong* and all the females of the wife's *julu* in the region. In their presence, the *Khunang* discusses the matter and tries his level best to resolve the matter between them initially. If they all fail to do so then the discission of divorce is taken collectively and the *Khunang* announces the divorce in the presence of all. The divorce is then socially recognized and the persons concerned are permitted to re-marry as per their choice (Paul 2001 :113; Mr. Suresh Ch. Barman, the head man of the urban Barman community).

Among the Barman of Silchar town, no case of divorce is found.

In sum, unlike the practice in the villages, in the urban Barman community the parents are not willing to arrange marriage of their daughter before the age of 25 in most of the cases. In the town they give more importance to education rather than beauty and weaving skills as preferred in the villages. But at the time of marriage alongwith patri and matri clan exogamy the level of relationship is also considered. The marital ties of the Barman in view of the changing atmosphere of political awareness. Contrary to the negotiated marriage in the tradition and the villages the urban Barman community is accepting elopements and inter-community marriages. But violation of clan exogamy rule is not tolerated at all and it leads to ex-communication.

The marriage customs of the Barman community have similarly with the Hindu Bengali marriage ceremony in the region. But at the same time a few tribal traditions such as *Shandidangshinba* (the formal proposal of marriage by offering salt wrapped in plantain leaf), *Laothai-Langba* (carrying of traditional rice beer in a gourd laothai), *Kulti* system (Bride price), *Mayoforgurba* (rites for welfare) and tradition of singing folk songs by the womenfolk a the time of marriage, etc. are followed in the Barman community. In the town due to the space shortage, business and ignorance of the detailed customs, the Barmans have cut short some of the customs. Now-a-days, some marriages are held in marriage halls, some are in Kachakanti Temple and some are also held. But they do try to observe the customs utmost. The customs like *Shandidangshimba; Laothai-Langba, Kulti, Mayofargurba, Gidingba, Yauphaba, Disengba*, are observed precisely. Despite the fact of there being no tradition of dowry a bride's family is, now-a-days, presenting many gifts like furniture, electric goods, etc. to the groom without any demand on his part. Divorce and re-marriage are also allowed in their custom but in special circumstances and in traditional manner. No doubt, there is a bit relaxation in the matter of inter-community marriage in the town, yet the *Dandi* rule restricts the young generation from its excessive practice. The preference in the town is also for negotiated marriage.

Thus, under the impact of urbanization the Barman community is passing through more or less changes in the age, mode, arrangement, ceremonial rituals of marriage and traits of bride and dowry in marriage. The changes are conspicuous in the matter of bride's age and traits, arrangement of marriage and modes of marriage. A mixture of tradition and change administered properly is perceptible among the Barmans in the town.

Lineage

Lineage is a corporate descent group composed of consanguine kins who claim descent from a common ancestor and who are able to trace descent genealogically through known links. The ancestor of a lineage is a real person and not a mythological or legendary figure and the descents ordinarily lived not more than five or six generations back (Singh 1978 : 147). The members of the lineage feel themselves to be more closely related than clans members.

In the Barman community the lineage of father is called *Fa-Boson* (Patri lineage) and the lineage of mother is called *Ma-Boson* (Matri lineage). The word *Bosong* means lineage. Generally in the rural Barman community the significance of lineage is not so prominent like double clan system. But they invite their all lineage members during marriage, *annaprasana*, funeral and religious activities. Moreover, in funeral activities the person of same lineage can do the rite in absence of son (Barman 2006 :2).

As the urban Barmans migrated haphazardly time to time, it become impossible for them to make contact with all the fellow members of lineage, but they invite their relatives on different social and religious occasions as far as possible. Besides, they also follow the lineage rule in funeral activity in absence of son.

Clan System

Clan is a group of the people affiliated by the rules of descent in a society. The rules which affiliate each person to a particular and definable set of kins are called rules of descent. Such rules vary from society to society. Succession and inheritance is related to this rule of descent. Descent does not necessarily involve genealogical ties.

It refers solely to a cultural principle whereby an individual is socially allocated a specific group of consanguineal kinsmen. There are three rules that have been identified regarding the descent; viz., unilateral descent, bilateral descent and double descent. Unilateral descent has two forms patrilineal and matrilineal descent. When the descent is traced solely through the male line, it is called patrilineal descent and when the descent is traced solely through the female line it is called matrilineal descent. There are some societies like American society where no principle operates, i.e., individuals in those societies do not relate themselves to a common ancestor. When descent of any particular line is not counted; rather they accept relatives of both, father's and mother's side with equal importance. Such system of descent is known as bilateral descent. In some societies, both patrilineal and matrilineal rules of descent are followed together, not alternatively and their joint application is known as double descent system. Though the two system, bilateral and double descent, follow two lines of descent for their manifestation, yet the difference is that bilateral descent does not segregate matrilineal and patrilineal kins rather combines them in one group. But double descent, although it combines two principles, they are independent of each other. As a result, individuals hold membership in two distinct social groups opposite in nature. They, therefore, associate themselves exclusively with one or the other, in different situations and for different purposes (Basu Roy 2003 : 543-45).

The Dimasas follow the double descent system and adhere strictly to the rules pertaining to feminine and masculine clan systems in marriage and other social matters. Having differentiated from the Diamsa, the Barman of Cachar district strictly follow the double clan system, i.e., matriclan (*Julu or Jadi*) and patriclan (*Sengphong*).

In both the Dimasa and the Barman, a daughter continues the mothers clan, while the son keeps alive the father's clan. But some differences are prevailing in respect of number of clans between the Dimasa and the Barman. In a significant anthropological study of Dimasa tribe (Danda 1978) reported that there are altogether 40 patriclans and 42 matriclans among the Dimasas whereas Guha (2006:68-71) listed about 40 patriclans and 42 matriclans among the Barmans. Of these 34 sengphongs are found common among the Barmans and the Dimams. Bhattacharjee (2006 : 18-19) has listed the following 42 *sengphongs* and 40 *Julus* :

Sengphong - *Langtasa, Hagjersha, Hojaisa, Thousensa, Naidingsa, Nunisa, Batharisa, Hakomusa, Daulagapusa, Langmailaisa, Bodosu, Phonglosa, Kemprsa, Dibregedesa, Khersa, Senguisa, Warisa-bapurusa, Jidungsa, Rajiyungsa, Maibangsa, Jaharisa, Dadunglousa, Parbasa, Haphilasa, Maramsa, Riyaosa, Hasnusa, Haflongbasa, Aordausa, Laubangdisa, Nabensa, Diphusa, Gorolsa, Karigapsa, Labdaisa, Soraphangsa, Daulagajaosa, Saijangsa, Mailosa, Hathamsa, Jagangsa, Jarambusa.*

Julu/Jadi - *Mairongma, Mairong-daoga, Miyung-daoga, Banglai-daoga, Saidim- daoga, Bairing-gidiba, Bairing-kherba, Bairing-jutha, Banglaima, Bisorma, Drainsa-gidiba, Drainang-khersa, Eyamthaima, Disira, Gasaomni, Hamlai-gimndi, Kalachanda, Saidima-dengma, Saidima-khaseba, Saikhudi-sagao, Borani, Rani, Rajamni, Bugumni, Gorani, Daokha, Khelangma, Madaimin, Saidima-jutha, Banglaima-khaseba, Saidima-gidiba, Miuma, Miuma-Jutha, Miuma-khaseba, Diyung-khaseba, Bisalmani, Daukhou-khelangma, Miumadaoga, Bonglaima-daoga, Mairong-khaseba.*

Clan and Marriage

Regarding marriage, they strictly follow exogamy rule in both patri and matri clans. For example, '**A**'s *Sengphong* is *Thousen* and his mother's *Jadi/Julu* is *Gashousma.* '**A**' marries a person '**B**' whose *Jadi/Julu* is *Rajama* and father is *Langthasa.* Their offsprings '**C**'(boy) and '**D**'(girl) will take *Thousen* as *Sengphong* and *Rajama* as *Julu/Jadi.* After marriage, '**C**' children will belong to *Thousen Sengphong* but their *Julu* will be that of their mother ('**C**'s wife). Likewise '**D**'s children will have *Rajama Julu* but their *sengphong* will be that of D's husband. The double clan system is demonstrated in the following chart.

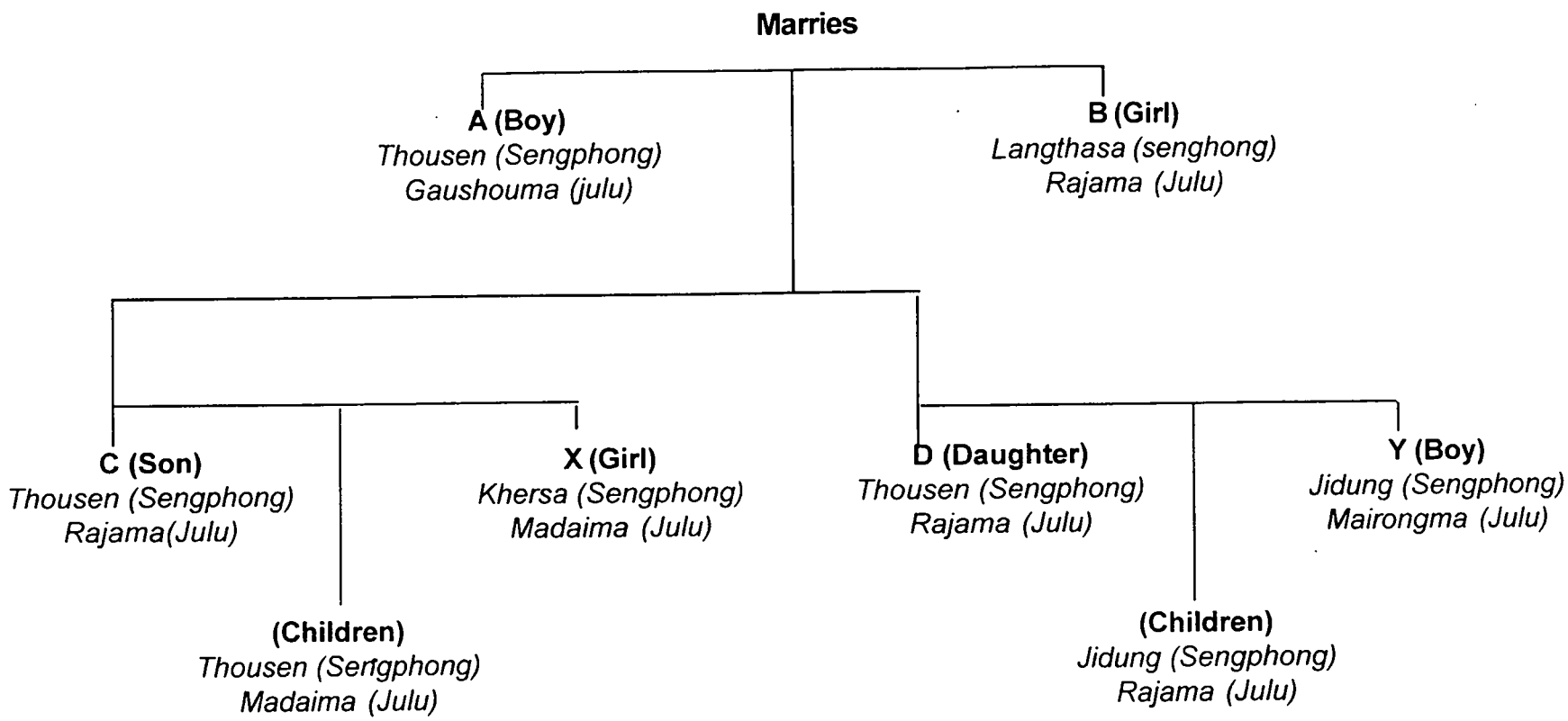

Thousen
Langthasa
Khersa
Jidung
} *Sengphong* i.e. Male clan

Rajama
Grashouma
Madaima
Mairongma
} *Julu* i,e. Female clan

Among the Dimasas of N.C.Hills all the sengphongs and Julus are considered equal. But among the Barmans in the plains of Cachar there is a hierarchical system in both *Sengphongs* and *Julus*. This is the impact of Hindu social stratification on the Barmans after shifting of their capital from Maibong to Khaspur. In the royal court some hierarchy of clans was made by the Kings to be followed compulsorily by all (Sen 2003: 223).

The Dimasas of the hills use their patriclan as their surname whereas the Barmans in the plains simply use the title 'Barman' instead of their patri clan. For example, Girish Chandra Kemprai is a Dimasa of the hills but Girish Chandra Barman is a Barman of the plains. But, now-a-days, some Barmans of rural and urban areas of Cachar are also using their patri clan as their surname in order to re-integrate themselves with the Dimasa-Kachari tribal group under the political efforts through the movement 'Dimaraji' launched for formation of a new state for them. Besides, some Barmans abandon their surname and use the parti-clan for taking the benefits for the Scheduled Tribes (Hills) in education and employment.

Clan Re-adjustment

In spite of the tribe endogamy rule compulsorily to be followed by all, some marriages have taken place between Barman males and females with non-tribal people. The incidents are found in the town only. The inter-community marriages posed some problems for their social structure. The major problem is that the non-Barman people do not have any matriclan, for which the Barman community did not recognize these marriage as offspring of such couples will have no matriclan and this poses the problems for their children's marriage in future. Under influence of modern education

and life style, the urban Barman youths like to choose their mates themselves, some times ignoring restrictions of inter-community marriage. So, now the Barman community has allocated two new matriclans *Phaijindirao* for any non-Barman girl marrying a Barman boy and *Phaifindiaro* for female descendents of the out going women. A few years ago, the society has excommunicated a Barman female who married a non-Barman male. But there is apprehension that if the number of such marriages increased it may pose a problem of depopulation for the Barman community as a whole. To overcome this problem the community decided that the male offspring of such couples will bear their patriclans which are naturally the non-Barman and thereby they will be treated a part of their respective (non-Barman) father's society whereas the female offspring of such Barman women will possess a new matricaln *Phaifindiaro* and thereby will remain a part of their (Barman) mother's community. It is how they have recognized both types of the inter-community marriages in the community. But they prefer to give their daughters to Dimasa boys rather than non-Barman boys with a view to revive their cultural identity (Paul 2001 : 98).

Thus, the new matriclans *Phaijindirao* and *Phaifindiaro* indicate structural adjustment in the Barman social structure. Though such type of marriage is unknown in the rural areas, yet it is now-a-days happened in the town which is one of the sources of change. Besides, it reflects the capacity of re-adjustment in the social structure of the Barman society in Silchar town.

In a case of inter-community marriage mentioned below the couple has to face many problems initially, but ultimately it was accorded the social approval of the Barman community.

Name	:	Ajoy Barman
Age	:	31 Years
Sex	:	Male
Qualification	:	M.Sc.
Occupation	:	Postal Assistant in the Department of Posts
Address	:	*Byelane No. 1. Gunomoyee Road, Silchar*

Seven years ago Mr. Ajoy Barman married a Bengali girl named Suma Chakroborty violating the wishes of his guardians and the tribe endogamy. They tied nuptial knot in Kachakanti temple in Udharbond, But their marriage was approved by the guardians neither of the two. The couple had to live in a rented house. After passage of about one and a half year, Ajoy Barman's guardians approached the *Khunang* (the headman of the Barman community in Silchar) to settle the matter. The executive body recommended the dandi or punitive measures for recognizing the marriage in the community. The community gave the new matriclan *Phaijindirao* to the non-Barman bride and the couple was accepted by the Barman community. Ajoy Barman's guardians took the couple in their house and now they give daughterly treatment to their daughter-in-law in the family. Ajoy's wife is also well adjusted in the family and has picked up their dialect also

***Sengphong* (Patri clan) and *Julu* (Matri clan) of the Urban Barmans**

The following table is presented on the distribution of the Barman population in the town in accordance with their *Sengphong* (patri clan) and *Julu* (matri clan).

Table 4 . 8 : Distribution of the Barman Population by Their *Sengphongs* (Patriclan) and *Julus* (Matri clan) in Silchar Town

Name of the *Sengphong* (Patriclan)	**Number of Males (%)**	**Name of the Julu (Matriclan)**	**Number of Female (%)**
Langthasa	23 (9.13)	*Mairangma*	17 (7.83)
Hagjersha	8 (3.17)	*Mairong-daoga*	13 (5.99)
Hojaisa	5 (1.98)	*Miyung-daoga*	9 (4.15)
Thousensa	10 (3.97)	*Banglai-daoga*	7(3.23)
Naidingsa	9 (3.57)	*Saidima-daoga*	5 (2.30)
Nunisa	8 (3.17)	*Baireng-kherba*	5 (2.30)
Batharisa	6 (2.38)	*Baireng-jutha*	14 (6.45)
Hakomusa	2 (0.79)	*Banglaima-gedeba*	15 (6.91)
Daulagapusa	5 (1.98)	*Diyung-khesiba*	8 (3.69)
Daula-gajaosa	13 (5.16)	*Miuna-daoga*	7 (3.23)
Jagangsa	3 (1.19)	*Bonglaima-daoga*	6 (2.76)
Jarambusa	3 (1.19)	*Mairang-khaseba*	13 (5.99)
Langmailaisa	1 (0.40)	*Miuma-khesiba*	7 (3.23)
Phonglosa	26 (10.32)	*Bisorma*	5 (2.30)
Kemprisa	14 (5.56)	*Gasaomni*	8 (3.69)
Dibregedesa	7 (2.78)	*Saidima-dengma*	4 (1.84)
Khersa	12 (4.76)	*Saidima-khaseba*	8 (3.69)
Senguisa	5 (1.98)	*Saikhudi-sagao*	5 (2.30)
Warisa-bapurusa	8 (3.17)	*Borani*	21 (9.68)
Jidungsa	13 (5.16)	*Rani*	1 (0.46)
Rajiyungsa	2 (0.79)	*Rajamni*	8 (3.69)
Maibangsa	8 (3.17)	*Gorani*	7 (3.23)
Dadung lousa	6 (2.38)	*Khelangma*	4 (1.84)
Haphilasa	3 (1.19)	*Banglaima-khaseba*	9 (4.15)
Joharisa	8 (3.17)	*Miuma*	8 (3.69)
Hasnusa	7 (2.78)	*Phaijindirao*	2 (0.92)
Halflongbarsa	5 (1.98)		
Nabensa	16 (6.35)		
Diphusa	6 (2.38)		
Goralsa	4 (1.59)		
Laubangdisa	6 (2.38)		
Total	**252 (100)**	**Total**	**217 (100)**

Source : Field Survey, March 01 - November 30, 2006

The table reveals that the Barman males of the urban Barman community belong to 31 *Senghongs*. Of the total males, most of the people belong to *Phonglosa Sengphong* (10.32%) followed by *Langtasa* (9.13%). The *Nabensa* group of people stand in the third position preceding *Kemprisa, Jidungsa, Daulagapusa, Khersa, Thousensa* and so on.

On the other hand, the Barman females of the urban Barman community belong to 26 Julus. Of the total females most of them are belonging to *Borani Julu* (9.68 %) followed by *Mairongma* (7.83%). The *Banglaima gedeba* group of females stand in the third position preceding *Mairangdaoga, Mairong Khasiba, Miyungdaoga, Banglaima-khaseba* and so on.

In sum, in view of the incidents of inter-community marriages in the urban setting the community has re-adjusted their double clan system by introducing two new matri clans; viz., *Phaijindirao* (for incoming women from other community) and *Phaifindirao* (for female descendents of the outgoing women) to cope up with its apprehension of depopulation. On the other hand, their tilt in marriage towards the Dimasa restrengthen their clan structure rather than changing it. The whole double descent system is still remains unchanged not only in rural Barman community but also in urban Barman community. Here, continuation of their tradition is seen much in urban Barman community despite a few changes.

Phratry

Phratries are bigger groups than clans. A phratry is made by the combination of many clans. The phratry organization is relatively rare and functionally insignificant

phenomenon. This type of organization is prevalent among various tribes of India and their societies are divided into number of phratries. Each phratry consists of a number of clans named after a certain mythical ancestor who may be human or plant or animal or inanimate object. It is, therefore, a unilineal descent group larger than a clan. As is found in a clan, the members of a phratry are not able to demonstrate their genealogical links with the common ancestor, although they strongly believe in such ancestor. The clans constituting a phratry may retain their individual identities and may have special obligations to full fill towards each other. For the most part, the phratry sentiment seems to rest either on a tradition of common origin or on common interests in ceremonial activities (Banarjee 1997 : 125; Basu Roy 2003 : 548).

The Barman tribe of Cachar district has such type of social organization like their Dimasa counterpart. The tribe is divided into number of phratries called *Hari* meaning a boundary or class in their language. In Dimasa language the suffixing of *Hari* to a word signifies a new meaning, e.g., *Maa-Hari/ Maahari* (Morther-Phratry) means Mother's alike class (Mother's like); *Julu-Hari* (Phratry of matri-clans); *Sengphong Hari* (Phratry of Patri-clans); *Nosur-Hari* or *No-Hari* (neighbour families); *Nolay-Hari* (neighbour villages); *Desh-Hari* (neighbour countries) etc. In this way a number of *Sengphong* and *Julus* together forms *Senghphong-Hari* and *Julu-Hari* respectively. Therefore, a *Sengphong-Hari* or a *Julu-Hari* comprises a number of patri or matri clans which are alike on the basis of descents of a common ancestor. In other words, a number of patri and mari clans which believed to have descended from a common origin form *Sengphong Hari* and *Julu Hari* respectively. Among the Barmans the three *Sengphongs*; viz., *Dipusa, Hagjaer/ Hagjersa* and *Thousensa* from a common Hari

as they believe to have originated from the three sons of the king Bhadrasen; viz., Deja (*Dipusa*), Aja *(Hagjer / Hagjersa*) and Ishan dhaj (*Thousen*). These *Sengphongs* emerged in the first part of the 16th century (Hagjer 1986 : 1 ; Barman 2006 : 1). Similarly the four Senghongs; viz., *Daolagjao, Daolaguphu, Hojai* and *Jidung* form another Hari and they are the descendents of a common ancestor Gunai (Barman and Paisoda : 1915 :1).

Like *Sengphong Hari* , some *Julu Haris* are found such as *Mairangma, Mairong daoga* and *Mairong-khaseba* form a common *Julu Hari; Banglaima-gedeba, Banglaima daoga* and *Banglaima-khaseba* form a common *Julu Hari, Baireng-kherba* and *Bairen-gjutha* form a common *Julu Hari*. *Saidima-dengma* and *Saidima-khaseba* form a common *Julu Hari* (Source : Bidhan Barman, an M.Phill research scholar of Assam University, Silchar).

Generally, a phratry may or may not be exogamous . It depends upon the prevailing custom of the society. In the Barman tribe phratries are exogamous. That is a man and a women belonging to the *Senghphong Hari* (father's phratry) and *Jului Hari* (mother's phratry) can not marry in spite of the fact that they belong to different parti (*Sengphong*) and matri (*Julu*) clans (Barman 2006 : 1).

This phratry exogamy rule is maintained by both the rural and urban Barman population while negotiating a marriage.

Kinship

Kinship is a social institution to governs the social behaviour of people in a genealogical group, expressed through verbal and non-verbal interactions. There are two kinds of kins on the basis of relationships; viz., consanguineal kins and Affinal kins.

Consanguineal kins are those who are related by blood such as parents and their children of biological origin or adopted whereas affinal kins are those who are related by marital bond. It includes not only husband and wife but also their new relations resulting from that marital relationship. In the various types of relations the members observe different types of behaviour in the forms of avoidance, familiarity and deference. These signify the relational potentialities to release some psychic attitudes and impulses and maintain smooth functioning of the society.

Kinship Behaviour

In the Barman community, various kinship behaviours and terminologies are determined during the interactions within a kin group. Three important relationships found among them are based on avoidance, familiarity and deference.

Avoidance

Like all the traditional societies the Barman society of the plains of Cachar is having certain usages of avoidance according to which some relatives must avoid each other in their day-to-day interactions. They do not speak to each other, do not touch each other, do not sit together, do not mention each other's name and even do not look each other in face during interactions. Such as, a Barman daughter-in-law avoids facing parents-in-law and the elder brother of her husband. Daughter-in-law generally veils when she confronts them. The father-in-law and husband's elder brother speak impersonally by hints towards her. They do not even use indecent language before their daughter-in-law. In addition to this, she must be veiled in face to face interactions with all the aged persons of her affinal kins. Not only that, but also she must be veiled in front of the aged persons of the village. The daughter-in-low always speak in law voice and

never goes too far in argument with her in-laws and husband's elder brother. Similar type of avoidance is found between son-in-law and parents in-law among the Barmans. Son-in-law does not talk directly to his parents-in-laws. He never smoke in front of them. Hen does not even cut indecent jokes in front of in-laws. Here, the usage of avoidance is more observed while interacting with mother-in-law than father-in-law (Source : Mrs. Namibala Barman, an aged woman living in Itkhola, Silchar).

These usages of avoidance are followed by the urban Barmans of Silchar town also, but in a relaxed way. Now-a-days, daughter-in-law and son-in-law treat their parents-in-law the way they treat their own parents. They become gradually free with their parents-in-law instead of strict avoidance. But at the same time they do observe a few restrictions as well while dealing with them. The daughter-in-law never sit together with her father-in-law, but may sit with her mother-in-law. In the town they do not veil themselves in front of their parents-in-laws at home. But the women whose parents-in-law are living in village do veil whenever they visit their respective villages because the people of village are more traditional than the people of town. However, the modern Barman women maintain a little avoidance in interaction with the husband's elder brother. Though they do not compulsorily veil in front of him, yet they are very much conscious in oral interaction, in physical contact at the time of exchange of things. Like rural Barman women, the urban Barman women never mention the names of parents-in-laws, husband's elder brother and husband also.

Joking Relationship

On the other hand among some relatives the usage of joking relationship is also prevailing in the Barman community between sister-in-law and brother-in-law, between

brother's wife and her husband's younger brother, between grand father and grand daughter. It is expressed by exchange of abuse and banter, obscene and vulgar references to sex, damage of each other's property, articles etc. during the familiar interactions.

Such type of usages of joking are also common among the Barmans in Silchar town. The relation between brother-in-law and wife's younger sister is very real, deep and friendly which gives good deal of freedom in cutting jokes and making fun of one another. Even she can demand anything from her brother-in-law. Whenever he comes to in -laws house, she will prepare delicious foods, give him company and look after him utmost. But he never cuts jokes with his wife's elder sister. On the contrary, the elder sister always maintain dignity in her behaviour while dealing with her younger sister's husband.(Source : Mrs. Namibala Barman, an aged woman living in Itkhola, Silchar).

Similarly, the urban Barman society gives quite liberty in the joking relationship between husbands younger brother and the brother's wife. But both of them must maintain some limits while cutting jokes. As in most cases, the Barman families of the town are nuclear families, there is rare scope of interaction between them. Nevertheless, whenever they visit one another's house, they get the scope of joking and making fun by teasing one another. But at the same time the brother-in-law (the husband's younger brother) always respects her and never disobeys. On the other hand the sister-in-law, i.e., the elder brother's wife always treats him as her own younger brother.

Besides, there is prevailing joking relationship between grand father and grand daughter in the Barman community in general and the urban Barman community is not exception to that. Although a little joking relationship is there, yet the feeling of love,

respect and demands is seen much between them in their conducts. The grandfather never uses indecent language in front of his grand daughter and grand son.

In sum, joking relations prevailing among certain kins, of the rural and urban Barmans have similarities and all the kins maintain reciprocal relations of love and respect in spite of familiarities.

Deference

In addition to these, there are some usages of deference prevailing between parents and children, brothers and sisters, between two brothers and two sisters in rural and urban Barmans.

In the patrilineal society, father is primarily responsibility to provide protection and material support to son until he attains maturity and to daughter until she is married. At the grown up stage, relationship between father and son demands economic cooperation in masculine activities and the son acts mostly under the leadership of father. But the same obligation shifts from father to the son when the father becomes old or incapable.

But in urban Barman community, as the people are non - agriculturists, no question arises to work under the leadership of father and the economic cooperation of the son is not asked until he becomes able to earn himself and the father becomes retired from his job.

Mother's primary responsibility is to make her son and daughter obedient and disciplined from the early days of childhood but economic support does not come within the purview of this relationship. This relationship basically signifies care and protection from mother. At a little grown-up stage, a daughter takes lessons of house-work and

weaving from mother. As the son grows and mother becomes old, she is absolutely dependent on son after the death of her husband for material support and care.

Though mother's cooperation in economic activity is not compulsory, yet now - a - days the Barman women of the town are working in Government and private sectors and at the same time look after her family.

The relationship between two brothers and two sisters depend on the difference of age. Usually their relationship is like playmates and they behave like comrades during their childhood and where the age difference is lesser. But where the age difference is greater, elder brother or sister instructs the young ones to discipline them.

Generally, in rural community, the economic cooperation is found among brothers in the grown up stage and the younger brother remains under the leadership of the elder (Source : Mrs. Namibala Barman, an aged women living in Itkhola, Silchar).

But in the town most of the families being nuclear families, the economic cooperation of brothers cannot be possible there. However, in some joint families the brothers are found to cooperate in economic and masculine activities. Even then they never remain under the leadership of the elders and rather prefer equality in relations.

In respect of brother-sister relationship, they are the playmates in the days of childhood. But in the grown up age, some restrictions advised by their elders come up in their interactions. But affection and cooperation persist between them. Where the difference of age is clearly much more, the elders maintain a gesture to instruct the younger ones in all matters.

Thus, the Barmans have similar features of brother - sister relationship in rural and urban areas.

On the whole the kinship behaviour of the rural and urban Barmans exhibit similarities, but under the impact of urbanization on family, occupation and values it is in the process of change in the town.

Kinship Terms

In order to denote, designate and distinguish the relatives, some identificatory terms called kinship terminology are used in colloquial dialects of different societies, which vary from culture to culture. The homologous and analogous terms signify the social structure and kinship patterns of different societies. In every society the terminology may be classified into two broad categories; viz., classificatory and denotative. The classificatory terminology is used to designate a class of relatives, which determines or influences social relations and occupies the same status or position in genealogy. Denotative terms of kinship are used for denoting and distinguishing a single relative at-a-time of the ego in the actual or virtual genealogy. It is again classified into terms of address and terms of reference. The kinship terms which are used for addressing a relative by the ego during his or her face to face interaction in day to day life are known as terms of address whereas the terms which are used to refer or describe the identity of the relative of the ego in relation to other relative of ego to a third person is known as terms of reference.

The kinship terminology of the Barman shows the close relations and affection between matrilineal and patrilineal kin groups. The both are considered equally important. Both the kins remain present at the time of marriage, death, birth and other important occasions. An attempt is made here to analyse the paternal kins, maternal kins and affinal kins of the Barman in the town.

The kin terminologies of the Barmans are given below (Paul 2001 : 118-20).

Paternal Kin Terminology

(1) *Abai* - Ego's father

(2) *Amai* - Ego's mother

(3) *Amaoshi* - Ego's step mother

(4) *Aaju* - Ego's grand father

(5) *Adai* - Ego's grand mother

(6) *Aboda* - Ego's grand father's father

(7) *Amayung* - Ego's grand father's mother

(8) *Adeh* - Used for both ego's father's elder brother and ego's father's elder brother's wife.

(9) *Adzi* - Ego's father's younger brother.

(10) *Amazdi* - Ego's father's younger brother's wife

(11) Amayung - Ego's father's sister

(12) *Aboda* - Ego's Father's sister's husband

(13) *Adeh* - Ego's elder brother

(14) *Bubraollng* - Ego's elder brother's wife

(15) *Adung* - Ego's younger brother

(16) *Bubraoling* - Ego's younger brother's wife

(17) *Abih* - Ego's elder sister

(18) *Bigim* - Ego's elder sister's husband

(19) *Ajang* - Ego's younger sister

(20) *Bigim* - Ego's younger sister's husband

(21) *Basha* - Ego's son

(22) *Bahamjik* - Ego's son's wife, i.e., daughter-in-law

(23) *Bishik* - Ego's daughter

(24) *Bajamadzi* - Ego's daughter's husband, i.e., son-in-low

The terminalogy used for various relations is shown in the chart 4.1

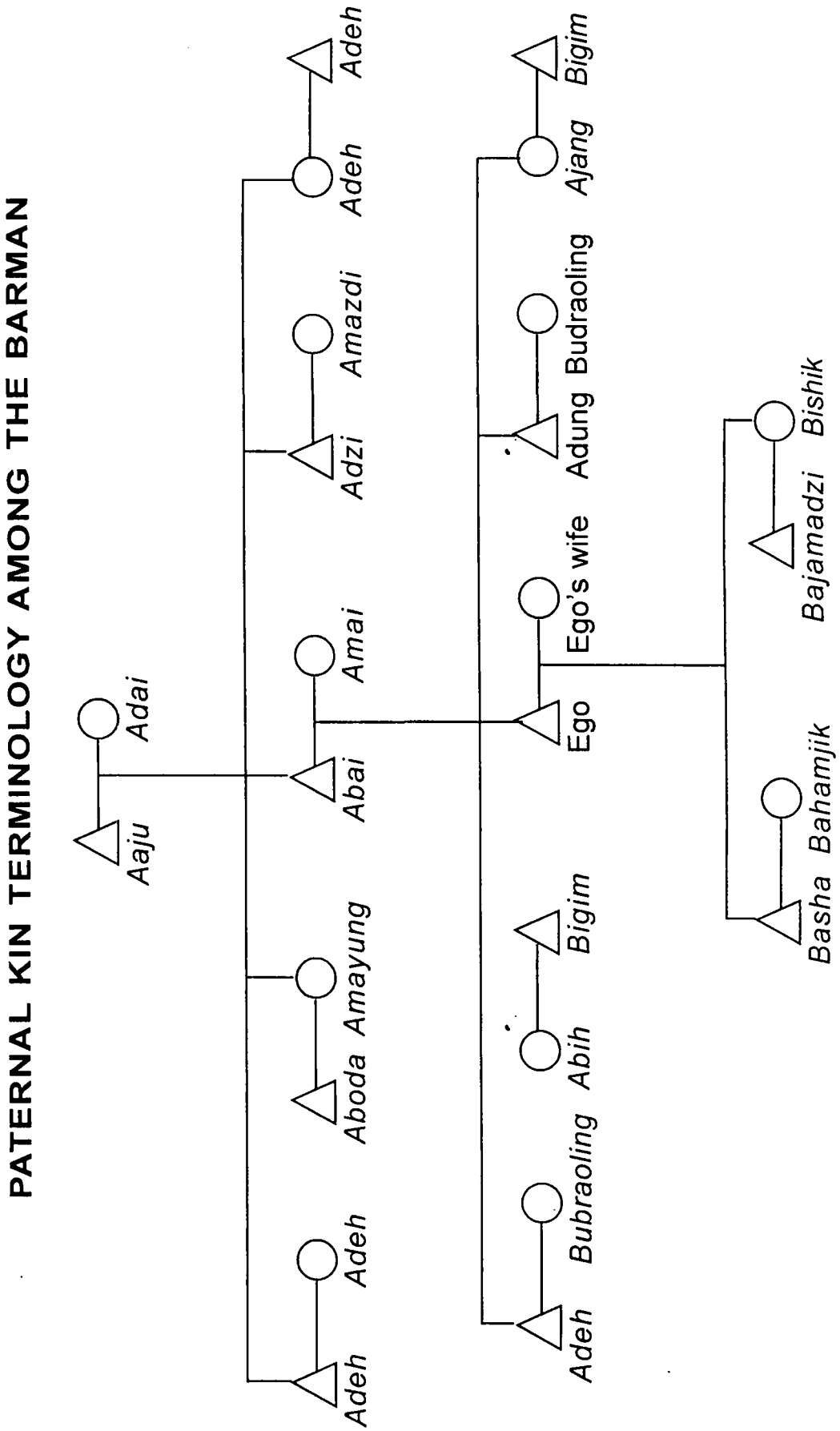

Maternal kin Terminology

(1) *Adzi* - Ego's step father

(2) *Aaju* - Ego's maternal grand father

(3) *Adai* - Ego's maternal grand mother

(4) *Adeh* - Ego's maternal uncle (elder and younger) maternal uncle's wife

(5) *Amayung* - Ego's mother's elder sister

(6) *Aboda* - Ego's mother's elder sister's husband

(7) *Amasha* - Ego's mother's younger sister

(8) *Amoshi* - Ego's mother's younger sister's husband

(9) *Adehni Basa* - Ego's maternal uncle's son

(10) *Adehni Busuk* - Ego's maternal uncle's daughter.

(11) *Amaoshini Basa* - Ego's maternal aunt's son

(12) *Amaoshini Busuk* - Ego's maternal aunt's daughter.

The terminology used for various maternal relations is shown in the chart 4.2.

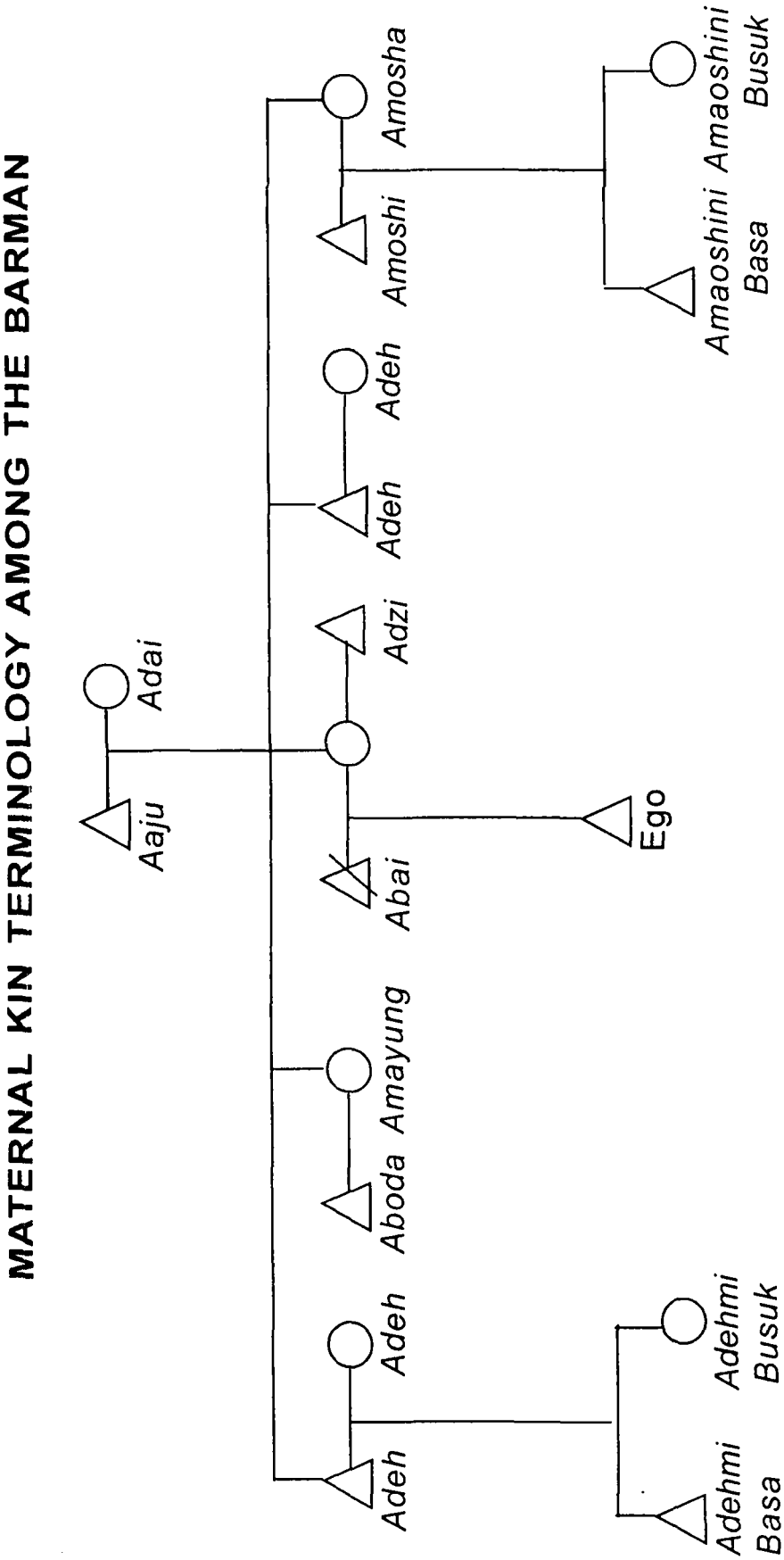

Affinal Kin Terminology

(1) *Bachao* - Ego's husband's father, i.e, father-in-law

(2) *Bushuma* - Ego's husband's mother, i.e, mother-in-law.

(3) *Bubaoji* - Ego's husband's elder sister.

(4) *Bubaojnibasai* - Ego's husband's elder sister's husband.

(5) *Bubraoling* - Wife's younger sister

(6) *Buatu* - Wife's younger sister's husband

(7) *Bigmi* - Wife's younger brother

(8) *Bahandao* - Wife's of younger brother's wife.

(9) *Buai* - Husband's elder brother.

The terminology used for various affinal relations is the chart 4.3. shown bin

AFFINAL KIN TERMINOLOGY AMONG THE BARMAN

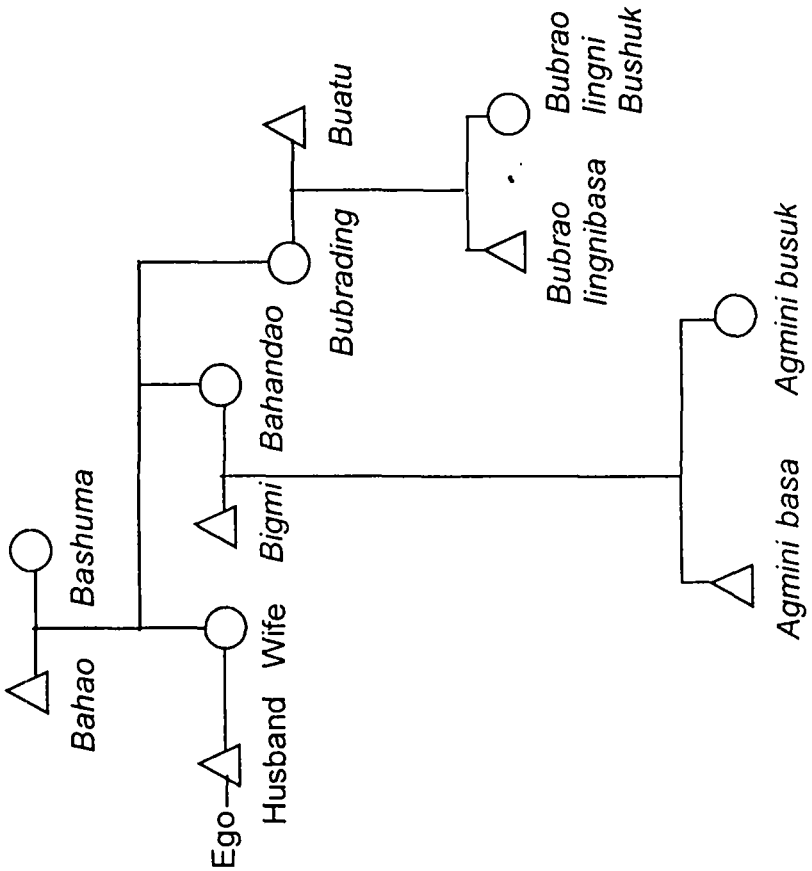

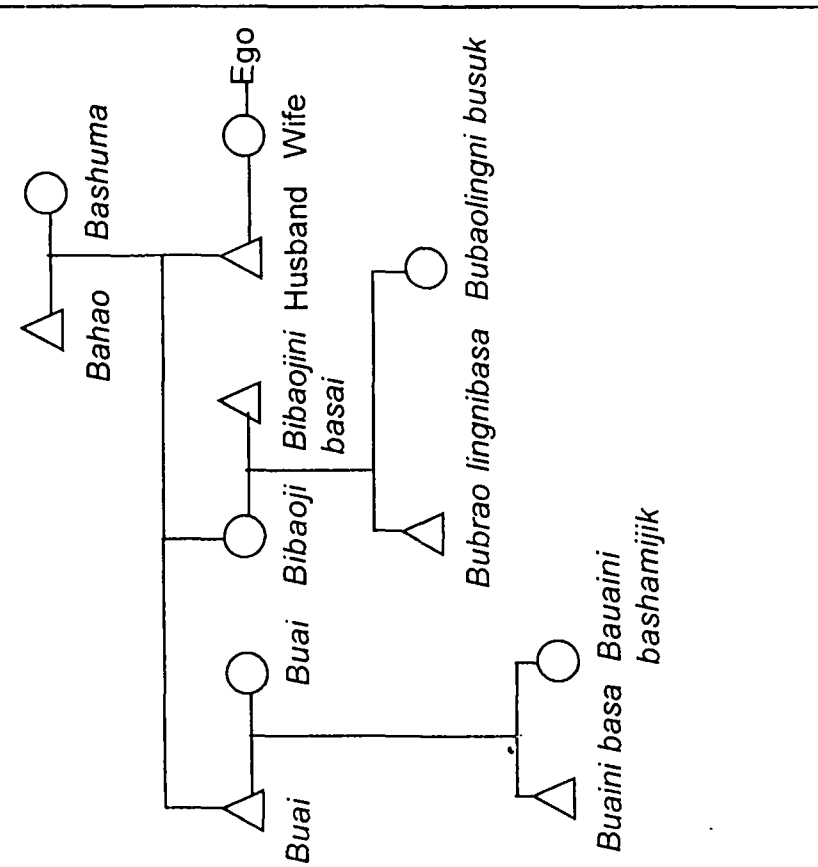

In the paternal, maternal and affinal Kin terminologies, three specific terms of address are used by the Barmans to specify a relative. These are *Gedeba* (the eldest), *Langerba* (elder) and *Khaseba* (the youngest) which are used among the elder brothers and sisters. For elder brothers, they use the common classificatory term *Adeh*. Therefore, they call the eldest brother *adeh gedeba*; second elder brother *adeh langerba* and third elder brother *adeh khaseba*. Likewise, for elder sisters they use a common term *Abih*. Therefore, for the eldest sister they use *abih gedeba*; for the second elder sister they use *abih langerba*; and for third elder sister they use *abih khaseba*. Besides, in all other classificatory terminologies they use these three specific terms to address a particular kin.

Presently, due to urbanization , English education and Bengali culture, many changes are seen in the kinship terminologies of the young generation of the Barman in the town. They are using Bengali or English terms instead of their traditional ones in their face to face interaction in daily life. A few examples are given below.

(i) For 'father' they like to use the Bengali term *Baba* or the English term 'papa'.

(ii) For 'mother' they use either the Bengali term *Maa* or their traditional term 'Amai'.

(iii) For 'elder brother' they use the Bengali term *Dada* and specify the seniority by suffixing the three specific terms, *gedeba, langerba and khaseba*. Therefore, they use *dadagedeba* for *adeh gedeba; dadalangerba* for *adeh langerba* and *dada khaseba* for *adeh khaseba*. Thus, they combine the Bengali and the Barman terms to denote a relationship.

(iv) For 'elder sister' they now-a-days, use the Bengali term *Didi* by suffixing three specific terms of address *gedeba, langerba and Khaseba.*

(v) They call younger brother and sister by name instead of using adzi and adeh.

By the usage of the terms in various age groups in the town they are categorized into three groups; viz., the young (0-30 year), the middle aged (31-50 year) and the old aged (51-above) as shown in the following tables.

Table 4.9 : Distribution of the Young Barmans into the types of Kinship Terms in Silchar Town.

Marital Status	Kin	Number of Persons (%)				
		English	Bengali	Barman	Combination of Bengali & Barman	Total
Both Married & Unmar-ried	Father	68 (28.69)	90 (37.97)	79 (33.33)	—	237 (100)
	Mother	—	105 (44.30)	132 (65.70)	—	237 (100)
	Elder brother	—	53 (22.36)	83 (35.02)	101 (42.61)	237 (100)
	Elder Sister	—	51 921.52)	88 (37.13)	98 (41.35)	237 (100)
	Grand Father	—	39 (16.46)	198 (83.54)	—	237 (100)
	Grand Mother	—	36 (15.19)	201 (84.81)	—	237 (100)
	Uncle	—	—	237 (100)	—	237 (100)
	Aunty	—	—	237 (100)	—	237 (100)
	Brother-in-law	—	64 (17)	173 (72.95)	—	237 (100)
	Sister-in-law	—	57(24.05)	180(75.95)	—	237 (100)
Married Only	Father-in-law	—	—	33 (100)	—	33 (100)
	Mother-in-law	—	—	33 (100)	—	33 (100)
Females	Husband's - Elder Sister	—	23 (100)	—	—	23 (100)
	Husband's Elder Sister's Husband	—	—	23 (100)	—	23 (100)
	Husband's Elder Brother	—	—	23 (100)	—	23 (100)
Males	Wife's Elder Sister	—	—	10 (100)	—	10 (100)
	Wife's Elder Sister's Husband	—	—	10 (100)	—	10 (100)

Source : Field Survey, March 01 - November 30, 2006

Note : Total Young Barmans- 237 Unmarried People- 204 Married males and females - 33
Only Married Males - 10 Only Married Females - 23

The table reveals that two seventh young people are using the English term *Papa*, two fifths are using the Bengali term *Baba* and the rest one third are using the Barman term *Abai* to address the father. For addressing mother three seventh people are using the Bengali term *Ma* and the rest four sevenths are using the Barman term *Amai*. Elder brother and sister is called as *Dada* and *Didi* respectively by one fifth people like Bengali and the rest four fifths use the Barman specific terms or combining Bengali and Barman terms. To address grand parents over one seventh youngs use Bengali terns and the rest youngs use Barman terms. For brother-in-law and sister-in-law one fourth youngs use Bengali terms and the rest three fourths use Barman terms. Besides, the rest all the consanguineal and affinal kins are addressed by the young people through Barman specific terms.

Now, the table on distribution of the middle aged (31 - 50 years) Barmans into the types of terminologies they are using in the town is as follows.

Table 4.9 : Distribution of the Middle aged Barmans into the types of Kinship Terms in Silchar Town.

Marital Status	Kin	Number of Persons (%)			
		Bengali	Barman	Combination of Bengali & Barman	Total
Both Married & Unmar-ried	Father	23 (12.78)	157 (87.22)	-	180 (100)
	Mother	20 (0.56)	160 (88.88)	-	180 (100)
	Elder brother	11 (6.11)	157 (87.22)	13 (7.22)	180 (100)
	Elder sister	11 (6.11)	160 (88.88)	9(5)	180 (100)
	Grand father	-	180 (100)	-	180 (100)
	Grand mother	-	180 (100)	-	180 (100)
	Uncle	-	180 (100)	-	180 (100)
	Aunty	-	180 (100)	-	180 (100)
	Brother-in-law	-	180 (100)	-	180 (100)
	Sister-in-law	-	180 (100)	-	180 (100)
Married Only	Father-in-law	-	170 (100)	-	170 (100)
	Mother-in-law	-	170 (100)	-	170 (100)
Females	Husband's elder brother	-	81(100)	-	81 (100)
	Husband's elder sister	-	81(100)	-	81 (100)
	Husband's elder sisters husband	-	81(100)	-	81 (100)
Males	Wife's elder sister	-	89 (100)	-	89 (100)
	Wife's elder sisters husband		89 (100)	-	89 (100)

Source : Field Survey March 01 - November 30, 2006

Note : Total Middle aged Barmans- 180 Unmarried People- 10 Married males and females - 170
Only Married Male - 89 Only Married Female - 81

The table reveals that over one tenth people are using Bengali terms to address their mother and father. Except a few middle aged people who are using Bengali and combined Bengali & Barman terms to address elder brother and sister, the rest all the middle aged Barmans are using their specific terms while interaction with their consanguineal kins and affinal kins.

Therefore, only a small fraction of middle aged Barmans are using a few of the Bengali terms. Besides, all the old aged Barmans are using only their Barman specific therms for consanguineal and affinal kins.

Thus, in their language one finds the continuity among the old age people; a little sanskritization or regional patterning among the middle aged and a very significant acculturation, rather sanskritization of terms on the regional (Bengali) pattern alongwith a little usage of English terms leading to syncretization of their language in the town.

In sum, the Barman in the town, more or less, practice the kinship behaviours of avoidance, joking and deference. But variation in these behaviour patterns is also perceivable. The preponderance of nuclear families provide no occasion for avoidance of the father-in-law or brother-in-law but they do observe veiling before these kins while visiting them in the villages. In the town the daughters-in-law and the parents -in-law feel free to each other. The former treat the latter as their own parents and the latter treat the former as their own daughters. Still, there remains some sense of avoidance between the two. Almost the same nature of the relationship between a woman and her husband's elder brother is found. Similarly, in the matter of familiarity and deference in their interactions also certain changes on the line of egalitarianism

are discernible. In the matter of language a significant syncretization of Bengali terms and a little of English terms is taking place in view of their acculturation of the urban middle class in the regional setting of Silchar town. But one fact is quite clear that even their young generation which is the vehicle of acculturation, sanskritization or modernization is accommodating the borrowed elements consciously and meaningfully in the already existing strong framework of their existence. Their organization in the town is well aware to take care of their traditional institutions, culture and collective interests.

Social Stratification

Social stratification refers to the division of a population into strata arranged hierarchically as one on top of another group. These stratified divisions of the society are generally represented as 'class' 'caste' 'rank' and so on (Banerjee 1997 : 132). As social stratification on the basis of caste in one of the important criterion of Hindu society, after adoption of Hinduism such kind of social stratification was introduced in the Barman community by the Hindu priests who were appointed as *Rajgurus* (the royal priests in the court of Kachari kings. The Rajgurus introduced four varnas such as Brahman, Kshatriya, Vaishya and Sudra which are the basis of Hindu social life mentioned in the smrities. On the basis of the occupation they divided all the working groups of the Kachari people in four castes. Thus, the people belonging to the royal family became the Kshatriyas, those belonging to barber and gardener families became the Sudras, those belonging to priestly families became the Brahmins and the rest became the Vaihyas (Sen 2003 : 60).

Here, a list of *Sengphongs* is presented on the basis of their respective families (Guha 2006 : 70-71).

Name of the *Sengphong*	**Class of the family**
Ripasgao (Hashmusa)	Royal family
Ripaparoin (Haflong Basa)	Royal family
Rajiyung	Peasant
Bader Raiga	Minister's family
Ardao	Peasant
Mither Phang	Peasant
Dipu	Writer family
Hagjer	Messenger family
Phanglo daoga	Peasant
Thousen	Royal family
Sengyung	Royal family
Daolagajao	Peasant
Daolagupu	Blacksmith
Hojai	Peasant
Khumpri	Royal Cashier
Bodo	Royal family
Aakher	Minister's family
Jigdung	Peasant
Baindo	Peasant
Goini	Peasant
Hapila	Peasant
Diruya	Peasant
Daodung langla	Peasant
Kharigao	Peasant
Johora	Peasant
Noden	Peasant
Dibragada	Peasant
Langta Daoga	Cook's family
Giri	Peasant
Parbat	Blacksmith's family
Maibang	Peasant
Hasam	Peasant
Johori	Barber's family
Chongta	Peasant
Garlo	Peasant
Hakmao	Gardener's family
Marram	Peasant
Jarambu	Peasant
Labthai	Peasant
Laobangdi	Peasant

To become a Brahman *Hojai* (the traditional priest) there is no clan bar. Anyone can become a *Hojai* after performing priestly duties (Paul 2001 : 131)

However, all the 42 female clans (*Julu/Jadi*) belong to a common unstratified family, i.e., *Barmmanee*. But the womenfolk who belong to the *Jadigiri* group are outside the 42 *Jadis*. They are considered an inferior caste as they are believed to be *Sagainju* (Demoness) who practise some kind of black magic and worship evil female spirits. No, male from any one of the 40 *Sengphongs* wise to marry them (Guha 2006 : 68-71).

In spite of the caste system , there is no restriction regarding food, drink and communication among the four varnas of the Barmans. But while negotiating a marriage it is considered and a marriage between two different varnas is considered *miljia thalia* meaning mis-matching. However, the caste system in the community is not rigid as found in the Hindu castes. The Barmans in the town also maintain the caste distinctions by observing the *miljia thalia* restriction in their marriage negotiations. Otherwise, the caste distinctions are not perceived any other situation in their communal life.

Generally, there are found no class distinctions in the Barman community as the rural people are all agriculturalists of the kind. But in the villages the comparatively prosperous persons are respected by all the villagers and are also teased as *dangerou* (the propertied) if by mistake they fail to attend any social and religious function of the village (Source : Bidhan Barman, an M. Phil research scholar of Assam University, Silchar).

The feeling of class distinction is more prominent among the Barmans of the town than the Barmans of the village. In the diversification of jobs and employment of members in a family gives rise to class consciousness among the people. Though most of the people are engaged as clerks and peons in the Government offices, yet some of the families have their women also engaged in the Government and private offices. As a result the income and living standard go up and that family differentiates from the lower ones. This phenomenon generates a sense of class feeling though not the class consciousness as yet. Besides, a few engineers and doctors in the community are considered as belonging to the upper class. Perceptibly the class distinction is not found in daily life. But the economic distinctions surface in the negotiations for marriage of their children. The upper class people prefer a mate for their children from the same class. Yet, the class endogamy is not a rule.

Moreover, educational qualification also distinguishes among the people. The educated persons are respected by all in the community. They are invited in socio-religious functions and community meetings.

In sum, the feelings of caste and class surfaces in their marriage negotiations rather than in the daily life as observed in the town. But the clan consciousness which is very much is very much prominent is the basis of group solidarity and society as a whole.

On the whole, one finds the nuclearization of family, clan re-adjustment, increased age-at-marriage of girls, incorporation of the Bengali rituals and priests in marriages, diversification of marriage arrangement, reduction of rituals, increased freedom in mate selection, influence of egalitarianism in interpersonal relationship class consciousness

and syncretization of kinship terminology of the young ones are the tangible features which reflect the process of urbanization among the Barmans in the town.

The continuity of structure like lineage, clan and phratry caste is quite apparent. The accommodations here and there made in various institutions/structures indicate that the community is capable of managing challenge of the forces of change emerging from the urban environment and opportunities. There seems to be a managed balance between the continuity and change in the Barman community of the town

REFERENCES

Apadar, Z. A.	1996	**Dimasa Annesha,** Haflong : Nikhil Bhart Bongo Sahitya Sammelon
Banerjee, H. N.	1997	**Introducing Social and Cultural Anthropology,** Calcutta : K.K.Publication
Barman, B.	2006	*Kachari Shabder Budpatti : Gatro , Gosti, Sristhi o Bhashatatter Aloke*, Silchar : B. Barman
Basu Roy, I.	2003	**Anthropology : The Study of Man,** New Delhi : S.Chand and Company ltd.
Guha, U.	2006	**Cachar Itibritti**, Agartala : Parul Prokasak
Hagjer, N.	1936	**Hagjer Sengphong,** Haflong N.C.Hills : N. Hagjer
Nunisa, P.T.	2006	*The Dimasa Women Role and Status in the Society*, in **Gonthai,** M. Longmili and M. Hagjer (ed.) Haflong : Dimasa Samity
Paul, N.	2001	**Social Change among the Barmans of Barak Valley,** An Unpublished Ph.D. Thesis Submitted to the Assam University, Silchar
Sen, G.	2003	**Life in Kachari Kingdom at Khaspur**, Silchar : Puthigar